**Hilltop High School**
**Math 9 Review**

***Complete this review package to help ensure you are ready for Math 10C!***


## Operations with positive and negative numbers

**Multiplying and Dividing positive and negative numbers:**

- If the signs are the same (both positive or both negative) the answer will be positive.
- If the signs are different (one positive and one negative), the answer will be negative.

1. $3.7 \times (-8.6) =$
2. $(-4.6) \times 9.2 =$
3. $22 \times 3.9 =$
4. $8.3 \times 5.3 =$
5. $(-7.2) \times (-3.5) =$
6. $5.3 \times 55 =$
7. $(3.2) \times (-5.1) \times (1.2) =$
8. $(-6.4)(3.1)(-5) =$
9. $(4.1)(-4.7)(7.4) =$
10. $(8.4)(-7.6)(-2.6) =$

11. $(-20) \div 5 =$
12. $\frac{-157.5}{10.5} =$
13. $10.8 \div (-1.2) =$
14. $\frac{73.8}{-8.2} =$
15. $(93.6) \div (-3.6) =$
16. $\frac{-84.5}{-6.5} =$
17. $122.1 \div (-3.3) =$
18. $\frac{99.4}{7.1} =$
19. $(-25.6) \div 6.4 =$
20. $\frac{-88.4}{-6.8} =$

**Adding and Subtracting positive and negative numbers:**

| | | |
|---|---|---|
| Adding a positive number<br>Subtracting a negative number | $3 + 5 = 8$<br>$2 - (-8) = 10$ | **Addition** (move to the right on a number line) |
| Subtracting a positive number<br>Adding a negative number | $7 - 4 = 3$<br>$9 + (-5) = 4$ | **Subtraction** (move to the left on a number line) |

1. $10 + (-6) =$
2. $(-7) + (-3) =$
3. $5.4 - 3.6 =$
4. $7.2 + (-1.6) =$
5. $-8.6 - 4.1 =$
6. $-2.8 + 1.5 =$
7. $17.6 + 8.3 =$
8. $5.7 - 9.2 =$
9. $9.6 + (-9.7) =$
10. $21.6 - 25.4 =$
11. $85.7 + (-17.2) =$
12. $123 - 654 =$

13. $(-95.4) + (-45.9) =$

14. $1032.4 - 85.2 =$

15. $14.573 + (-4.753) =$

16. $67.381 - 45.972 =$

17. $(-12.7) + (-8.1) - (-6.4) + 15.6 =$

18. $18.7 - (-7.1) + 26.4 - (-8.5) + (-19.8) - 8.6 =$

19. $15.7 + (-8.9) - 5.6 + 7.1 - (4.8) =$

20. $(4.5) + 8.1 - 7.6 - (-9.2) + 6.2 - 4.2 + (8.9) - 2.9 =$

***More Practice*** – the more you practice mental math, the better you will get and the faster you will get without having to resort to using your calculator.

- Roll several dice and add, subtract, or multiply the values without using a calculator.
- Using a deck of cards, flip up two or more cards and add or multiply the values together. For an extra challenge, let the black cards be positive numbers and the red cards be negative. You can also flip them into fractions to add, subtract, multiply or divide.

**Pythagorean Theorem**
Helpful Reference:
www.mathsisfun.com/pythagoras.html

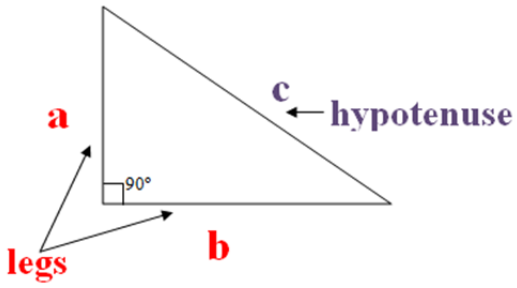


$$a^2 + b^2 = c^2$$

Tips:

- Identify and label each side
- Fill in the blanks in your formula
- Solve for the unknown
- Remember to take the square root to find the final answer!

Solve for the unknown side in each of these triangles. Round to the nearest tenth if necessary.

1.

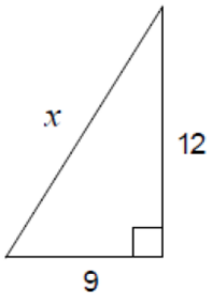


2.

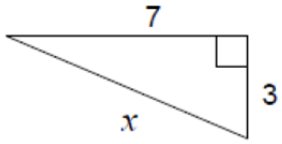


3.

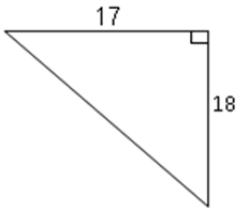


4.

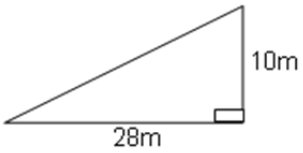


5.

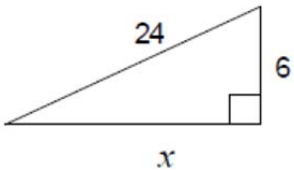


6.

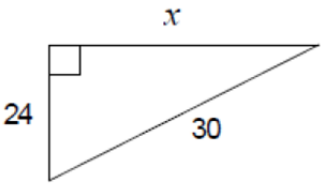


7.

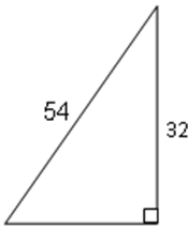


8.

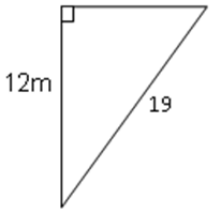

9.

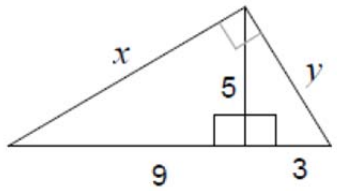


10. What is the length of **bd**?

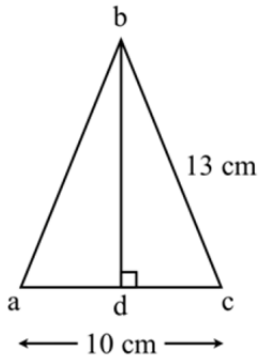


11. a = 12 ; b = 5; c = _____

12. a = 15 ; b =_____ ; c = 17

13. a = _____ ; b = 2 ; c = 4

14. Are these right triangles? How do you know?

a)

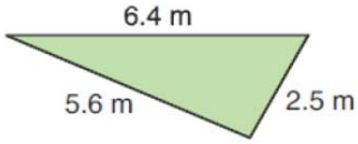


b)

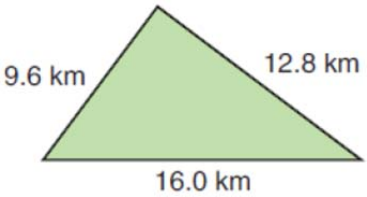


15. To get from point A to point B you must avoid walking through a pond. To avoid the pond, you must walk 34 meters south and 41 meters east. To the *nearest meter*, how many meters would be saved if it were possible to walk through the pond?

**Fraction Operations**

Simplify the following fractions:

1. $\frac{15}{18} =$
2. $\frac{42}{70} =$
3. $\frac{39}{52} =$
4. $\frac{65}{80} =$
5. $\frac{132}{96} =$
6. $\frac{102}{255} =$

Multiplying and dividing fractions. Your final answer should always be in simplest form:

1. $\frac{6}{5} \cdot \frac{4}{5} =$
2. $\frac{8}{9} \cdot \frac{12}{16} =$
3. $\frac{14}{20} \cdot \frac{5}{8} =$
4. $\frac{6}{7} \cdot \frac{21}{9} =$
5. $\frac{15}{24} \cdot \frac{12}{10} =$
6. $\frac{18}{22} \cdot \frac{4}{6} =$
7. $\frac{6}{5} \div \frac{4}{5} =$
8. $\frac{8}{9} \div \frac{12}{16} =$
9. $\frac{14}{20} \div \frac{5}{8} =$
10. $\frac{6}{7} \div \frac{21}{9} =$
11. $\frac{15}{24} \div \frac{12}{10} =$
12. $\frac{18}{22} \div \frac{4}{6} =$

Adding and Subtracting fractions. Your final answer should always be in simplest form:

1. $\frac{7}{10} + \frac{9}{10} =$
2. $\frac{4}{9} + \frac{7}{3} =$
3. $\frac{3}{4} + \frac{5}{6} =$
4. $\frac{6}{7} + \frac{3}{4} =$
5. $\frac{7}{15} + \frac{5}{6} =$
6. $\frac{1}{21} + \frac{3}{14} =$
7. $\frac{16}{20} - \frac{5}{30} =$
8. $\frac{10}{11} - \frac{10}{55} =$
9. $\frac{12}{27} - \frac{2}{6} =$
10. $\frac{5}{6} - \frac{4}{21} =$
11. $\frac{3}{6} - \frac{1}{9} =$
12. $\frac{3}{14} - \frac{4}{21} =$

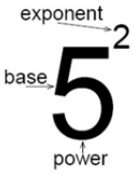


Exponent laws

| Exponent Law | Example |
|---|---|
| Product Law<br>$x^a \cdot x^b = x^{a+b}$ | $2^4 \cdot 2^5 = 2^9$ |
| Quotient Law<br>$\frac{x^a}{x^b} = x^{a-b}$ | $\frac{5^6}{5^2} = 5^4$ |
| Power of a Power<br>$(x^a)^b$ | $(3^5)^2 = 3^{10}$ |
| Power of a Product<br>$(x \cdot y)^a = x^a \cdot y^a$ | $(4m)^2 = 4^2 \cdot m^2 = 16 \cdot m^2$ |
| Power of a Quotient<br>$\left(\frac{x}{y}\right)^a = \frac{x^a}{y^a}$ | $\left(\frac{7}{9}\right)^2 = \frac{7^2}{9^2} = \frac{49}{81}$ |
| Zero Power<br>$x^0 = 1$ | $523^0 = 1$ |

Simplify each of the following into a single power. Do not evaluate:

1. $4^4 \cdot 4^7 =$
2. $52^3 \cdot 52^7 =$
3. $1492^{18} \cdot 1492^{22} \cdot 1492^{15} =$
4. $1867^3 \cdot 1867^6 \cdot 1867^9 =$
5. $\frac{7^9}{7^4} =$
6. $\frac{h^{12}}{h^5} =$
7. $\frac{987^{65}}{987^{43}} =$
8. $\frac{2016^{365}}{2016^{244}} =$
9. $(3^5)^7 =$
10. $(p^3)^8 =$
11. $(432^{18})^{37} =$
12. $(m^4)^{13} =$
13. $(3 \cdot 7)^8 =$
14. $(5 \cdot c)^2 =$
15. $(2 \cdot w)^7 =$
16. $(9 \cdot x \cdot y)^5 =$
17. $\left(\frac{9}{4}\right)^2 =$
18. $\left(\frac{x}{5}\right)^3 =$
19. $\left(\frac{17}{29}\right)^6 =$
20. $\left(\frac{100}{256}\right)^{512} =$
21. $5^0 =$
22. $827^0 =$

Simplify each expression using the exponent laws:

1. $(2^2)^2 \cdot (2^3)^4 =$

2. $\frac{4^7 \cdot 4^0}{4^3} =$

3. $\frac{7^5 \cdot 7^{12}}{(7^2)^3 \cdot 7^4} =$

4. $23^6 \cdot (23^3)^5 \cdot 23^2 =$

5. $\left(\frac{243^8 \cdot 243^9}{243^4}\right)^0 \cdot 243^5 =$

6. $x^5 \cdot x^3 \cdot (x^7)^3 =$

7. $(2x)^5 \cdot (4y)^3 =$

8. $\frac{2y^3 \cdot 3xy^2}{3x^2y^4} =$

9. $\left(\frac{12m^7 \cdot 4m^5}{6m^2}\right)^2 =$

10. $\left(\frac{5w^6}{2w^3}\right)\left(\frac{6w^3}{9w}\right)^2\left(\frac{3w^8}{10w^5}\right)$

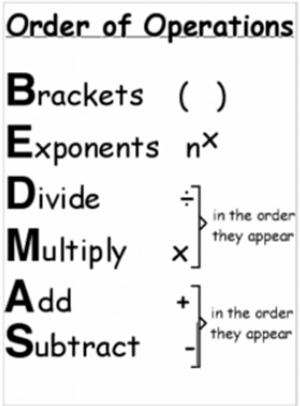


Order of operations - BEDMAS

What is the first step for each of the following?

1. $(7 + 90 \div 9) + 56 \div 7$
2. $10 - 7 + 12 \div 6 + 60 \div 6$
3. $10 + 5 + 7^{2} + 6^{2} + 8$
4. $10 + 7 + 8^{3} + (10 + 50 \div 10)$
5. $9 + 5 + 36 \div 4 + 54 \div 9$
6. $10 + 12 \div 6 + 6^{3} + 2^{3}$
7. $5 + 20 \div 4 + 56 \div 8$
8. $9 + (10 \div 2 + 3^{2}) + 5$
9. $8 + (90 \div 9 \times 5) \times 6$
10. $8 + 7^{3} + 2 \times 2 + 14 \div 2$

Evaluate using the order of operations.

1. $51 - 21 \times 2 =$
2. $9 - (10 \div (-2) - 5) =$
3. $40 \div 1 + 3 - (3 \times 7) + 7 - 5 =$
4. $(4 + 9 + 16 \div 4) - 8 - 3 \times 5 =$
5. $(15 \div 5 + 6 + 9) \times 4 \times 2 + 7 =$
6. $(5 - 6 \times 9 + 6) \times 9 + 3 - 85 =$
7. $4 - 9 + (7 \times 11) \times 5 + 7 + 8 =$
8. $(60 \div 3 + 4 \times 7 \times 9) \times 2 - 8 =$
9. $(9 \times 36 \div 6 - 5 \times 3) + 2 + 6 =$
10. $(9 - 84 \div 2 \times 5 + 5 + 6) + 2 =$

## Polynomials

Adding and Subtracting Polynomials

1. $(3x + 4) + (4x + 7) =$
2. $(9x + 2) + (7x - 5) =$
3. $(5x^2 + 3x + 2) + (9x^2 - 7x - 3) =$
4. $(4x^2 - 5x - 6) + (5x^2 + 2x - 7) =$
5. $(6x^2 + 1) + (8x^2 + 2x - 7) =$
6. $(13y^2 + 8y - 11) + (13y^3 + 4y^2 - 2) =$
7. $(4y^5 + 3y^4 - 2y^2 + 6) + (5y^3 - 7y + 5) =$
8. $(8m^2 + 3m^3 + 1) + (7m + 3m^2 - 5) =$
9. $(a^2 + a - 2) + (9a^2 - a - 2) =$
10. $(6k^2 - 6k + 3) + (12k^2 - 12k + 6) =$
11. $(4q^2 - 19q + 15) + (-18q^2 + 15q + 16) =$
12. $(7x + 4) - (3x + 2) =$
13. $(9x + 6) - (4x - 3) =$
14. $(8x^2 - 8x + 5) - (4x^2 + 4x - 7) =$
15. $(7x^2 - 2x + 3) - (6x^2 + 9x + 8) =$
16. $(16n^2 + 14n - 17) - (11n^2 - 6n - 6) =$
17. $(13p^2 - 21p - 16) - (24p^2 + 3p + 11) =$
18. $(63f^2 + 81f - 55) - (34f^2 + 96f - 87) =$
19. $(76g^2 + 53g - 61) - (-24g - 47g + 39) =$
20. $(86m^2 - 23m + 35) - (44m^2 + 19m - 7) =$

Multiplying Polynomials

1. $2(5x + 4) =$
2. $3(4x + 7) =$
3. $8(2x^2 + 6x - 5) =$
4. $4(4t^2 + 12t - 7) =$
5. $6(8h^2 - 4h + 9) =$
6. $2x(3x^2 + 5x - 7) =$
7. $3c(5c^2 - 7c + 1) =$
8. $5.1y(9.2y^2 + 6.2y - 8.7) =$
9. $12t(56t^2 + 13t - 23) =$
10. $2.3h(83h^2 - 74h - 41) =$

Dividing Polynomials

1. $\frac{(6x^2+14x+8)}{2} =$
2. $\frac{(27t^2-15t+12)}{3} =$
3. $\frac{(24k^2+44k-76)}{4} =$
4. $\frac{16x^2+22x}{2x} =$
5. $\frac{(105f^2-80f)}{5f} =$

***Ch 4***

1. Find the surface area of the following composite shapes

a)

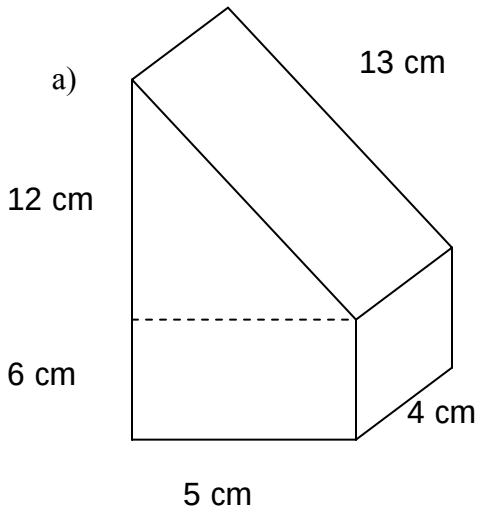


b)

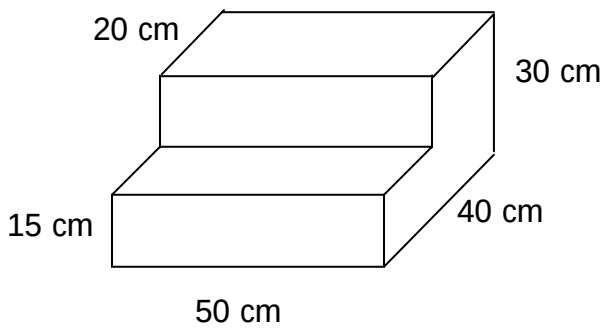


c)

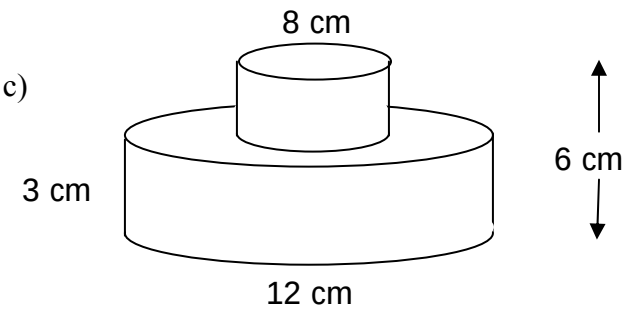


2. Find the area of the composite shape to the right.

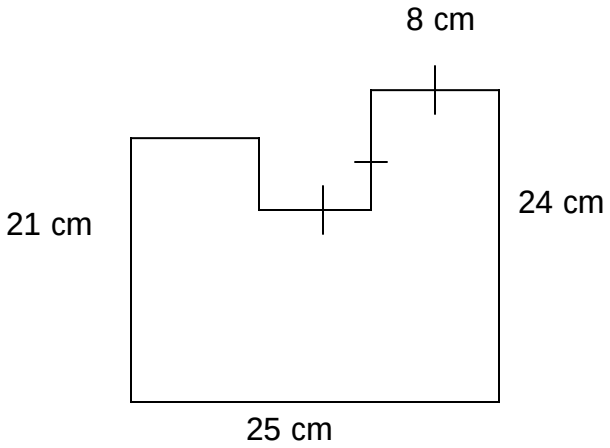


***Ch 5***

1. Dan mows the grass at a golf course. He charges \$8 per hour plus a flat fee of \$12. If $h$ represents the number of hours he works, and $C$ represents his total fee, determine the equation that represents what he charges.

2. Determine the relation that matches the table of values:

| | | | |
|---|---|---|---|
| $x$ | 1 | 2 | 3 |
| $y$ | 4 | 8 | 12 |

3. Determine the relation that matches the table of values:

| | | | |
|---|---|---|---|
| $x$ | 1 | 2 | 3 |
| $y$ | 8 | 6 | 4 |

4. Determine the rate of change for the relation $y = 2x - 5$.

5. Graph and label the following using a table of values:
   a) $y = -2x + 4$ b) $2x - y = 5$ c) $x = 4$

11. Complete the table for each polynomial.

| | ***Degree*** | ***# of terms*** | ***Coefficients*** | ***Variables*** |
|---|---|---|---|---|
| a) $2x^3y - 7xy$ | | | | |
| b) $-2ab^2 - ab + b^5$ | | | | |
| c) $3x^2yz + 4yz - 8z^2$ | | | | |

12. Simplify the polynomial $-5x^2 + 3x + x^2 - 5x + 10$.

13. Determine the sum $\left(2x^2 + 4x - 5\right) + \left(-6x^2 + x + 3\right)$.

14. Determine the difference of $\left(4x^2 - 3x - 1\right) - \left(-5x^2 + 7x + 2\right)$.

15. Determine the product of $\left(-3x\right)\left(-6x^2 + 2x - 5\right)$.

16. Determine the product of $\left(3x - 5\right)\left(x + 4\right)$.

17. Determine the quotient of $\left(24x^3y^2 + 8x^2y^2 - 12x\right) \div \left(-4x\right)$.

18. Express the perimeter of this rectangle as a polynomial and simplify.

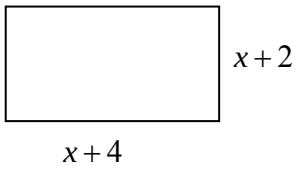


19. Express the area of this rectangle as a polynomial and simplify.

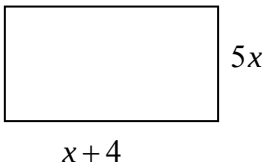


20. A rectangle has a perimeter of $(16x + 24)$ cm. If the width is (3x + 4) cm. find the length.

21. The perimeter of the triangle below is $12x - 8y$. Show an expression that determines the length of the missing side and then simplify completely.