FMPC 10: Chapter 1 Review

Prime Factorization and Exponents

Name: _____

Date: _____ Block: _____

Prime Factorization

1. Indicate the first 10 prime numbers: ____, ____, ____, ____, _____, _____, _____, _____, _____, _____,

2. Indicate if the following is a prime or composite number.

   a) 37 b) 45 c) 107 d) 95 e) 1

3. How many factors does the number "0" have?

4. Find all the factor pairs of the following:

   a) 18 b) 81 c) 24 d) 114 e) 200

5. Write each number as a product of its prime factors

   a) 140 b) 435 c) 546 d) 1925

6. Use prime factorization to determine the greatest common factor of the given numbers

   a) 90 and 225 b) 525 and 850 c) 66, 495 and 2541

7. Use prime factorization to determine the least common multiple of the given numbers

   a) 18 and 63 b) 125 and 175 c) 12, 30 and 105

8. Use prime factorization to determine the square roots of the following numbers.

a) 49 b) 484 c) 256

9. Use prime factorization to determine the cube roots of the following numbers.

a) 64 b) 729 c) 1728

Exponents

10. Write as a repeated multiplication.

a) $5x^3$ b) $(9a)^4$

11. Evaluate

a) 3^5 b) -4^2 c) $(-4)^2$ d) $\left(\frac{3}{5}\right)^3$

e) -15^0 f) $\frac{2}{3}(5^2)^0$

12. Simplify

a) $x^7 \cdot x^3$ b) $\frac{a^6}{a^5}$ c) $(c^4)^3$ d) $(10x^2y^3)^3$

e) $\left(\frac{2a^3}{5}\right)^2$ f) $3a^3 \cdot 5a^4$ g) $(-81e^9) \div (9e^3)$ h) $(3a^2b^5)(-5ab^2)(a^4b)$

i) $\dfrac{10e^8 f^6}{15e^4 f^8}$ j) $(-5x^2y^3)^2$ k) $(-2x^2y^3)^3(8xy^8)$

13. Evaluate

a) 5^{-2} b) $(-4)^{-2}$ c) -4^{-2} d) $\left(\dfrac{2}{5}\right)^{-3}$

14. Simplify. Write the final answer with positive exponents.

a) $\dfrac{18a^{-5}}{6b^{-4}}$ b) $\dfrac{10(p^3q^2r^0)^{-3}}{(8p^{-3}q^5r^3)^{-2}}$ c) $\left(\dfrac{a^{-2}}{b^{-5}}\right)^{-3}$

15. Simplify and write each number in Scientific Notation

a) 75,000,000 b) 261,0000 c) 0.0000036

d) 0.000432 e) 0.32×10^6 f) 513×10^{-3}

16. Determine the volume and surface area of each object. Ensure that you indicate appropriate units.

a)

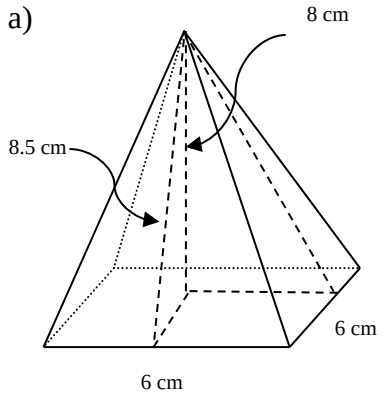

<u>Volume</u> <u>Surface Area</u>

b) 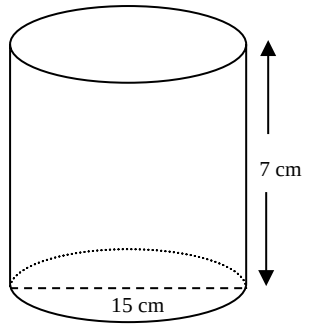

Volume

Surface Area

c) 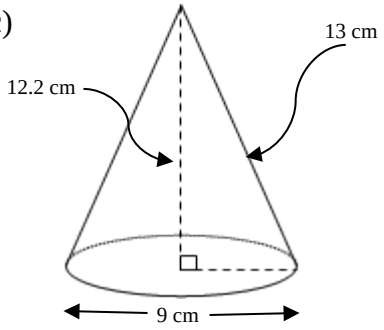

Volume

Surface Area

d) 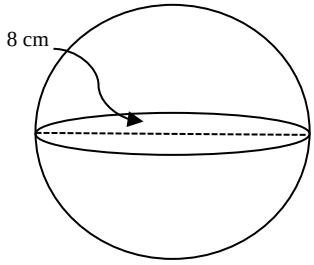

Volume

Surface Area

Answer Key

1. 2,3,5,7,11,13,17,19,23,29 2.a) P b) C c) P d) C e) neither 3. No factors

4a) 1×18, 2×9 b) 1×81, 3×27, 9×9 c) 1×24, 2×12, 3×8, 4×6 d) 1×114, 2×57, 3×38, 6×19

e) 1×200, 2×100, 4×50, 5×40, 8×25, 10×20 5a) $140 = 2^2 \cdot 5 \cdot 7$ b) $435 = 3 \cdot 5 \cdot 29$ c) $546 = 2 \cdot 3 \cdot 7 \cdot 13$

d) $1925 = 5^2 \cdot 7 \cdot 11$ 6a) 45 b) 25 c) 33 7a) 126 b) 875 c) 420 8a) ±7 b) ±22 c) ±16

9a) 4 b) 9 c) 12 10a) $5 \cdot x \cdot x \cdot x$ b) $9 \cdot 9 \cdot 9 \cdot 9 \cdot a \cdot a \cdot a \cdot a$

11a) 243 b) –16 c) 16 d) $\frac{27}{125}$ e) –1 f) $\frac{2}{3}$ 12a) x^{10} b) a c) c^{12} d) $1000x^6y^9$

e) $\frac{4a^6}{25}$ f) $15a^7$ g) $-9e^6$ h) $-15a^7b^8$ i) $\frac{2e^4}{3f^2}$ j) $25x^4y^6$ k) $-64x^7y^{17}$

13a) $\frac{1}{25}$ b) $\frac{1}{16}$ c) $-\frac{1}{16}$ d) $\frac{125}{8}$ 14a) $\frac{3b^4}{a^5}$ b) $\frac{640q^4r^6}{p^{15}}$ c) $\frac{a^6}{b^{15}}$

15a) 7.5×10^7 b) 2.61×10^5 c) 3.6×10^{-6} d) 4.32×10^{-4} e) 3.2×10^5 f) 5.13×10^{-1}

16a) V = 96.0 cm³, SA = 138.0 cm² b) V = 1237.0 cm³, SA = 638.3 cm²

c) V = 258.7 cm³, SA = 247.4 cm² d) V = 268.1 cm³, SA = 201.1 cm²